METRI ENGINEERING SERVICES W.L.L
متري للخدمات الهندسية ذ.م.م

M/s METCO Qatar **Kind Attn: Mr. Mohamad Rifdy** **E-Mail:** m.rifdy@metcoqatar.com **Mobile:**	RFG/QUOT- 3751/2026 **Subject: Supply OF Cube ICE Machine + Ice Bin**
DATE: 14/04/2026	Email: mes@mes.qa

Dear Sir,

With reference to the above subject, we are pleased to submit our quotation as follows:

Item	Model	Description	Qty	Unit Price	Total Price
Ice Cube Machine	Brema VM 500	- Single and crystal cube ice production - AISI 304 SS Scotch Brite finish - Tropical class +43°C - Air cooling system - Automatic washing system - **Production Capacity: 200 kg/24h** - Dimensions: 770 x 550 x 805 mm	8	18,975	151,800
Ice Storage Bin	Brema 240PE	-Compatible with VM 500	8		

Item	Model	Description	Qty	Unit Price	Total Price
Ice Cube Machine	Brema VM 900A	- Single and crystal cube ice production - AISI 304 SS Scotch Brite finish - Tropical class +43°C - Air cooling system - Automatic washing system - **Production Capacity: 400 kg/24h** - Dimensions: 770 x 550 x 805 mm	8	24,700	197,600
Ice Storage Bin	Brema 240PE	- Compatible with VM 900A	8		

Terms & Conditions

1. Prices are in Qatari Riyals (Q.R.) and exclusive of VAT.
2. Payment terms: 100% Advance
3. Warranty covers manufacturing defects only, does not include damage due to misuse.
4. Excluding: Any power or water arrangement at site.
5. **Warranty:** 1 Year
6. **Delivery:** Partial QTY Ex-stock (subject to prior sale), remaining within 30 days.

We look forward to your confirmation. Please feel free to reach out for any further clarifications.

METRI ENGINEERING SERVICES W.L.L

BREMA Ice Makers

VM 500

Fast Ice

Modular ice maker - Vertical evaporator system

Hotel	■■□□□□□□□
Restaurant	■□□□□□□□□
Fast food	■■■■■■■■■
Bar	■■□□□□□□□
Disco	■■■■■■□□□
Fish market	□□□□□□□□□
Supermarket	□□□□□□□□□
Medical & SPA	□□□□□□□□□
Industry	□□□□□□□□□

▶ Features & Plus

- Single and crystal cube
- AISI 304 SS Scotch Brite finish
- Tropical class +43°C
- Removable and cleanable air filter
- Air or water cooling system
- Easy cleanable internal rounded surface
- RoHS Free
- Electromechanical operation
- ON-OFF rocker switch
- Automatic washing system
- Standard and special voltages

Single and crystal cube

AISI 304 SS Scotch Brite finish

Removable and cleanable air filter

▶ Usable Bins

- Bin 240PE
- Bin 200
- Bin 350
- Double Roller Bin 100

▶ Available ice cube size

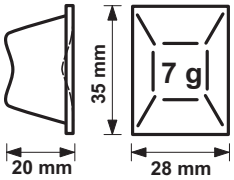

▶ Certifications available for this model

BREMA Ice Makers

We are Brema

Fast Ice

VM 500

BREMA Ice Makers

Modular ice maker - Vertical evaporator system

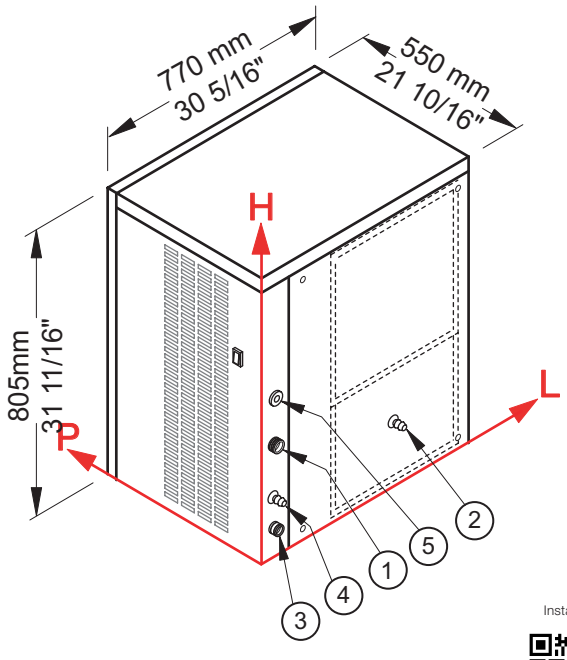

Installation

▶ Working conditions

- Location: **Indoor**

	Min	Max
Ambient temperature	+10° C / +50° F	+43° C / 110° F
Water temperature	+3° C / +37° F	+32° C / +90° F
Voltage	-10%	+10%
Water inlet pressure	1bar (14 psi)	6bar (84 psi)

▶ Performances

Air temperature \ Water temperature	7° C	45° F	15° C	60° F	21° C	70° F
10° C	205 kg					
50° F		452 lbs				
21° C			200 kg			
70° F				441 lbs		
32° C					163 kg	
90° F						359 lbs

▶ Connections

All measures are referred to the down-left corner (L-H-Ø)

① Water in.: 38 mm / 1 8/16" - 252 mm / 9 15/16" - 3/4"
③ Water out.: 32 mm / 1 4/16" - 40 mm / 1 9/16" - 24 mm / 15/16"
⑤ Electrical connections: 33 mm / 1 5/16" - 323 mm / 12 11/16"

② Cond. water in.: 375 mm / 14 12/16" - 115 mm / 4 8/16" - 12 mm / 8/16"
④ Cond. water out.: 28 mm / 1 2/16" - 93 mm / 3 11/16" - 12 mm / 8/16"
② ④ Only water cooling systems

▶ Technical information

Production in 24h	200 kg / 441 lbs
Cooling system	A - W
Kind of cube	7g
Refrigerant	R404A - R452A
Standard voltage	220-240 V ~ 50 Hz
Average power consumption	1600 W
Fuse	20 A
Finish	AISI 304 stainless steel, scotch brite

Water consumption	A: 2,4 l/kg - 28,7 gal/100 lbs
	W: 13 l/kg - 155,8 gal/100 lbs
Sizes (L-P-H mm)	770 - 550 - 805
(L-P-H in)	30 5/16 - 21 10/16 - 31 11/16
Sizes with pack (L-P-H mm)	815 - 615 - 980
(L-P-H in)	32 1/16 - 24 3/16 - 38 9/16
Net weight	90 kg / 198 lbs
Gross weight	101 kg / 223 lbs

All the technical information need to be considered at the following conditions:
Standard Cube (7 g)
Ambient temperature +21° C
Water temperature +15° C
Average power consumption at +43° C (standard voltage)
Refrigerant R404A

Models and specifications are subject to change without notice

Rev. 03 - Issued May 2018

BREMA Ice Makers

Bim + Data download

Bin 240 PE

Bin Series

▶ Features & Plus

- Polyethylene moulded, fit to come into contact with foodstuffs
- Highly insulated, avoid the ice melting for a long time

▶ Technical information

Storage capacity up to	180 kg - 397 lbs
Usable with	C 150 - VM 350/500/900 G 160/280/510/510 Split G 700 Split CO_2 - TM 140/250/450
Net weight	61 kg - 134 lbs
Gross weight	92 kg - 203 lbs
Sizes (L-P-H mm) *	942 x 795 x 1053 mm
(L-P-H in)	37 1/16 x 31 5/16 x 41 7/16 ”
Sizes with pack (L-P-H mm)	1035 x 885 x 1275 mm
(L-P-H in)	40 12/16 x 34 13/16 x 50 3/16 ”

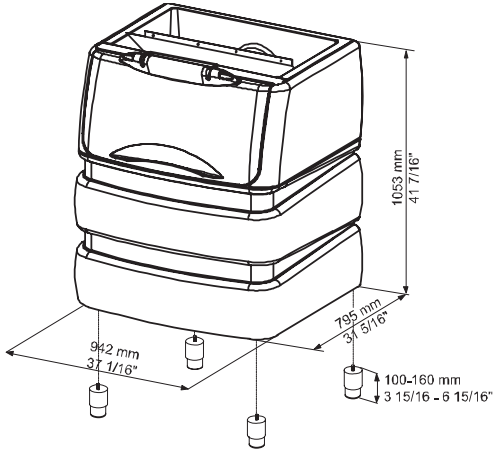

Sizes without feet
* Adjustable foot 100-160 mm

VM 900

Fast Ice

Modular ice maker - Vertical evaporator system
Daily production up to **414 kg**

Hotel	■■□□□□□□
Restaurant	■□□□□□□□
Fast food	■■■■■■■■
Bar	■■□□□□□□
Disco	■■■■■■□□
Fish market	□□□□□□□□
Supermarket	□□□□□□□□
Medical & SPA	□□□□□□□□
Industry	□□□□□□□□

▶ Position n°

▶ Features & Plus

- Single and crystal cube
- AISI 304 SS Scotch Brite finish
- Tropical class +43°C
- Removable and cleanable air filter
- Air or water cooling system
- Easy cleanable internal rounded surface
- RoHS Free
- Electromechanical operation
- ON-OFF rocker switch
- Automatic washing system
- Standard and special voltages

Single and crystal cube

AISI 304 SS Scotch Brite finish

Removable and cleanable air filter

▶ Usable Bins

- Bin 240PE
- Bin 200
- Bin 350
- Double Roller Bin 100

▶ Available ice cube size

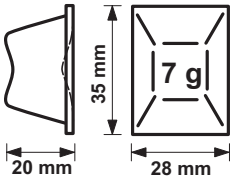

▶ Prod. 24h

Air temp.		Water temp.		Kg	Lbs
10° C	50° F	7° C	45° F	414	913
21° C	70° F	15° C	60° F	400	882

2 Years Warranty
subject to limitations

▶ Certifications available for this model

www.bremagroup.it
info@bremaicegroup.it

We are Brema

Fast Ice

VM 900

BREMA

Modular ice maker - Vertical evaporator system
Daily production up to 414 kg

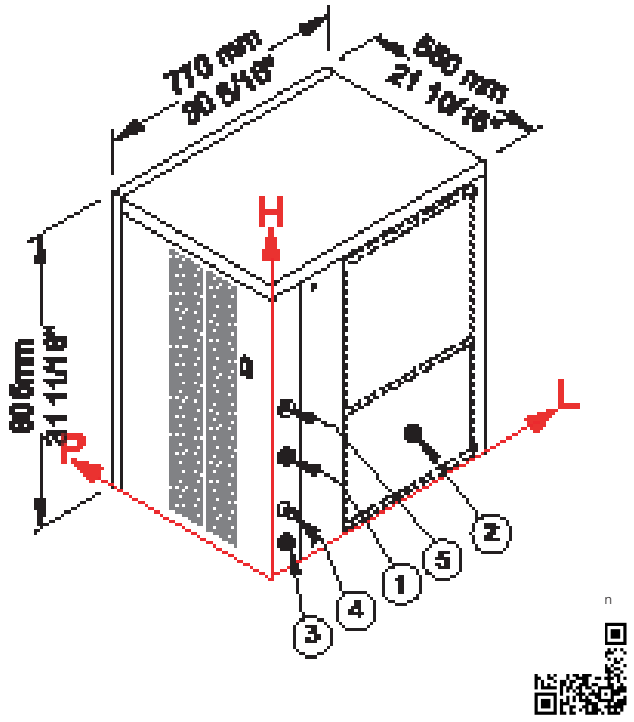

▶ Working conditions

- Location: **Indoor**

	Min	Max
Ambient temperature	+10° C / +50° F	+43° C / 110° F
Water temperature	+3° C / +37° F	+32° C / +90° F
Voltage	-10%	+10%
Water inlet pressure	1bar (14 psi)	6bar (84 psi)

▶ Performances

Air temperature \ Water temperature	7° C	45° F	15° C	60° F	21° C	70° F
10° C	414 kg					
50° F		913 lbs				
21° C			400 kg			
70° F				882 lbs		
32° C					334 kg	
90° F						736 lbs

▶ Connections

All measures are referred to the down-left corner (L-H-Ø)

① Water in.: 38 mm / 1 8/16" - 252 mm / 9 15/16" - 3/4"
③ Water out.: 32 mm / 1 4/16" - 40 mm / 1 9/16" - 24 mm / 15/16"
⑤ Electrical connections: 33 mm / 1 5/16" - 323 mm / 12 11/16"
② Cond. water in.: 375 mm / 14 12/16" - 115 mm / 4 8/16" - 3/4"
④ Cond. water out.: 28 mm / 1 2/16" - 93 mm / 3 11/16" - 12 mm / 8/16"
② ④ Only water cooling systems

▶ Technical information

Production in 24h	400 kg / 882 lbs
Cooling system	A - W
Kind of cube	7g
Refrigerant	R452A
Standard voltage	220-240 V ~ 50 Hz
Average power consumption	3000 W
Fuse	32 A
Finish	AISI 304 stainless steel, scotch brite

Water consumption	A: 1,8 l/kg - 21,6 gal/100 lbs
	W: 13 l/kg - 155,8 gal/100 lbs
Sizes (L-P-H mm)	770 - 550 - 805
(L-P-H in)	30 5/16 - 21 10/16 - 31 11/16
Sizes with pack (L-P-H mm)	815 - 615 - 980
(L-P-H in)	32 1/16 - 24 3/16 - 38 9/16
Net weight	113 kg / 249 lbs
Gross weight	124 kg / 273 lbs

All the technical information need to be considered at the following conditions:
Standard Cube (7 g)
Ambient temperature +21° C
Water temperature +15° C
Average power consumption at +43° C (standard voltage)

Models and specifications are subject to change without notice

Rev. 03 - Issued January 2025

BREMA
www.bremagroup.it
info@bremaicegroup.it

We are Brema